EuroMid Journal of Business and Tech-Innovation (EJBTI)
https://ejbti.com
Online ISSN: 3062-2131

Teaching Practices and Student Satisfaction in the Virtual Classrooms of a Peruvian Public University

Santiago Apolo Sánchez López
Universidad Nacional Santiago Antunez de Mayolo, Huaraz, Peru
E-mail: ssanchezl@unasam.edu.pe

Edwin Johny Asnate Salazar*
Universidad Nacional Santiago Antunez de Mayolo, Huaraz, Peru.
E-mail: edwin_johny@unasam.edu.pe
*Corresponding Author

Norma Ramírez Asís
Seguro Social de Salud del Perú, EsSalud, Lima, Peru.
E-mail: elva.ramirez@essalud.gob.pe

Carlos Huerta-Soto
Universidad Cesar Vallejo, Lima, Peru.
E-mail: chuertaso@ucvvirtual.edu.pe

Received: December 4, 2023; **Accepted**: May 1, 2024

Abstract: This study examines the relationship between teaching practices and student satisfaction in virtual classrooms at Universidad Nacional Santiago Antúnez de Mayolo (UNASAM), Peru, during the COVID-19 pandemic. A quantitative, non-experimental, cross-sectional correlational design was employed. Data were collected from 365 undergraduate students using validated instruments assessing teaching practices (43 items) and student satisfaction (12 items). Structural Equation Modeling (SEM) was used to analyze relationships between latent variables. Findings reveal a significant positive association between effective teaching practices and student satisfaction. Instructor accessibility, communication, and learning support emerged as strong predictors. Positive perceptions of virtual learning had a greater impact on satisfaction than negative ones. The SEM model demonstrated good fit (CFI = 0.952, RMSEA = 0.039, χ^2/df = 1.561). The results underscore the importance of improving pedagogical strategies, communication, and digital tools to enhance virtual education. This study contributes to understanding online teaching quality in Latin American public universities and offers guidance for improving virtual learning environments.

Keywords: Teaching Practices, Student Satisfaction, Virtual Classrooms, Structural Equation Model, Higher Education, Peru.

Type: Research paper

© 2024 The Author(s). This article is an open-access article distributed under the terms of the Creative Commons Attribution (CC BY 4.0) License.

DOI: 10.51325/ejbti.v3i2.192

1. Introduction

The COVID-19 pandemic has significantly accelerated the adoption of virtual education across the globe, compelling universities to rapidly transition to online learning environments (UNESCO, 2020; Schleicher, 2020). This shift has introduced new dynamics in teacher-student interactions and has raised questions about the effectiveness of teaching practices in maintaining educational quality (Díaz-Camacho et al., 2022). In the case of the Universidad Nacional Santiago Antúnez de Mayolo (UNASAM), virtual classrooms were implemented to ensure academic continuity. However, concerns persist regarding whether these virtual environments meet students' learning expectations and whether teaching practices have effectively adapted to the digital modality (Cabero-Almenara & Palacios-Rodríguez, 2021).

Although previous studies have addressed various dimensions of online teaching and student satisfaction (Pasquali et al., 2019; Morales-Saavedra, 2014; Durán et al., 2015), there remains a lack of empirical research exploring this relationship in the context of Peruvian public universities. Without a clear understanding of how specific instructional practices influence student satisfaction, institutional efforts to improve virtual education may lack focus and effectiveness. As Díaz-Camacho et al. (2022) and Villanueva et al. (2021) highlight, understanding student satisfaction is critical for evaluating the success of online education and identifying areas for improvement.

To ensure that all individuals have access to high-quality education that is both affordable and inclusive, UNESCO has identified Sustainable Development Goal 4 as a global priority. However, the pandemic drastically altered the path toward achieving this goal, necessitating an urgent shift to online instruction and digital solutions for all members of the academic community. Several factors hindered or even halted progress in improving educational quality, including financial barriers to acquiring computers, disparities in internet connectivity, and ineffective policies at both the state and university levels (UNESCO, 2020). Efforts to address these gaps have included the provision of internet-enabled devices and laptops to students and teachers, alongside extensive training on the use of virtual platforms. Nevertheless, ensuring consistent, high-quality instruction remains a challenge. During the pandemic, many teachers shifted their in-person classes online without adequate technological support or pedagogical adaptation. Although this allowed for educational continuity, it did not meaningfully enhance the quality of instruction (Pedró, 2020).

Methodologies and techniques are necessary to identify the variables that affect educational quality, which requires the evaluation of complex and often intangible characteristics. One formal approach to quality assurance is accreditation, conducted by external agencies to evaluate and improve university programs and services. In this context, public universities are required to present formal accreditation reports (Gómez-Arteta & Escobar-Mamani, 2021). Institutions of higher education are commonly evaluated based on quality indicators such as graduation rates, graduate employability, student satisfaction, and the academic output of faculty. University rankings also serve as comparative

tools, rating institutions on multiple dimensions including research, teaching, and graduate employability (Rivera et al., 2023). Ensuring that all young people in Peru have access to relevant and high-quality higher education is essential for developing competent leaders who can respond to the country's diverse needs.

During the transition to virtual learning, many teachers were left to navigate digital instruction independently, often focusing only on delivering curricular content without appropriate training in virtual pedagogical strategies. This lack of preparation has negatively impacted both student learning outcomes and satisfaction with online education services (Schleicher, 2020). The overarching goal of this study is to assess the quality of instruction in UNASAM's virtual classrooms and determine how it contributes to students' overall satisfaction with their educational experience. The findings are expected to serve as a critical benchmark for improving the university's virtual education program and ensuring that it meets the evolving expectations and needs of its student population.

Focusing on an emerging area of research in higher education, this study investigates how effective teaching practices relate to students' satisfaction with online courses. Structural equation modeling (SEM), a powerful tool for analyzing complex interactions, allows the simultaneous examination of multiple variables and their associations. By assessing the impact of instructional activities on students' perceptions and satisfaction, the SEM application at UNASAM provides valuable insights into the virtual learning environment. The findings of this study have the potential to inform the design of more effective virtual classrooms and to promote higher levels of student satisfaction. Furthermore, by identifying the teaching practices most closely associated with student satisfaction, the results can guide instructors and administrators in implementing evidence-based strategies. These findings may also support policy development aimed at improving the quality of virtual education and aligning instructional practices with student expectations.

Due to its focus on virtual learning environments, this study makes an important contribution to the social rationale for modern education. Given the increasing prevalence of virtual learning, particularly since the COVID-19 pandemic, it is essential to understand how these environments impact student outcomes. If the findings of this study help enhance the accessibility and equity of higher education, all students stand to benefit. Structural equation modeling, as a state-of-the-art statistical tool for analyzing the relationships between latent variables, is used in this research to ensure robust and accurate analysis. This methodology allows for precise estimation of the links between teaching practices and student satisfaction and supports the validation of the measurement models used. SEM enables researchers to conduct a comprehensive and detailed exploration of complex educational data.

This paper is structured as follows: Section 2 presents a review of the relevant literature on teaching practices and student satisfaction in virtual learning environments. Section 3 outlines the methodology, including the research design, participants, instruments, and analytical approach. Section 4 details the results of the structural equation modeling analysis. Section 5

discusses the findings in relation to the literature and draws implications for virtual education practice. Finally, Section 6 concludes the paper by summarizing the key contributions and suggesting directions for future research.

2. Literature Review

In recent years, virtual education has become a central focus of educational research, especially as institutions worldwide shifted to online modalities in response to the COVID-19 pandemic. This transition has challenged traditional teaching practices and prompted a reevaluation of how educators design, deliver, and assess instruction in digital environments. As a result, there is a growing body of literature examining the effectiveness of virtual teaching strategies, the integration of technology in pedagogical practices, and the extent to which these influence student satisfaction and learning outcomes. This literature review explores recent contributions in this field, focusing on teaching practices in online settings, their relationship with student satisfaction, and the implications for educational quality in higher education.

According to Pasquali et al. (2019), poly-teaching is crucial for virtual teaching practices via our investigation of Physical Education (PE) in the distance modality. This is because, as is typical in distance education, a large number of students are taught a discipline by many different specialists. When technology was integrated into distance Physical Education, it opened the door for instructional practices that were previously only possible in methodological contexts. Evidence of this advancement in the integration of theory and practice through pedagogical and technological resources includes discussions of texts and the use of movies to explain technical motions. This shows that although face-to-face education still has its features, there is progress in integrating the two. The value of digital technology in enhancing the teaching-learning process, providing greater flexibility, and increasing the availability of time and space for Physical Education professional training is widely acknowledged by teachers.

The significance of learning the platform and its tools and organizing one's work time, which originally demanded a great deal of commitment, is emphasized by Morales-Saavedra (2014). Educator morale, helping students who aren't tech-savvy, and using standardized criteria to evaluate student progress are additional obstacles. Critical tactics included ongoing instruction, encouraging messaging, and platform-based exemplification and exercise. To guarantee participants' persistence and achievement in remote courses, it is essential to treat them with kindness and keep them motivated through a connection of commitment and trust between instructors and students. Helping users become more proficient with the platform should be the primary goal of tutoring, with regular check-ins encouraged to ensure clear communication. However, Durán et al. (2015) found that teaching didactics is energized when effective educational practices are included in the planning and curricular design of virtual activities. These tasks are supported by the methods of Chickering and Gamson (1987), which include elements that might be left out during preparation. An efficient way to execute these best practices is through virtual education in the higher sphere, which enables the publishing and updating of activities according to course demands. According to De Melo-Pereira et al. (2015), when users are satisfied with e-learning, they are more likely to continue using it. This provides more evidence

that the course experience leads to personal happiness, which in turn is associated with utilizing virtual platforms for distance education in the future.

The methodological and evaluative adjustments enabled successful student monitoring in a highly unpredictable pandemic scenario (Ortega et al., 2021). The success of these modifications in meeting the stated learning outcomes and competency standards calls attention to the necessity for more varied assessment tools and targeted professional development for educators in the area of digital competence. Moreover, they stress the need for prior collaboration with interdisciplinary teams to guarantee data safety and effectiveness in pedagogical procedures. Consequently, according to Galarce-Miranda et al. (2022), the quick use of ICT in college courses during the COVID-19 epidemic proved the adaptability and usefulness of these tools for teaching. By seeing the value of ICT for both formal and casual learning, students are able to utilize it to their advantage in the classroom. In addition, García-Aretio (2021) considers the educational changes brought about by the COVID-19 epidemic, drawing attention to the fact that digital distance education provided new options throughout the crisis, despite the many mistakes and unfavorable views. He provides solutions for blended learning that can adjust to new requirements and maintain high standards of instruction, implying that hybridization and adaptability in education will be important in the years to come.

The goal of Gálvez-Sobral et al. (2014) was to examine virtual classroom teaching practices and student satisfaction. A total of 116 Guatemalan teachers from Quetzaltenango and Totonicapán participated in group interviews during the "Creative Classrooms" training program's final ceremony. Teachers' thoughts on how the program affected their teaching and student satisfaction were collected in semi-structured interviews with 10 open questions. Response coding using NVivo9 software categorized transcripts and analyzed comment frequency in distinct thematic nodes. Teachers' perception of the program's pedagogical assistance as a key differentiator from previous trainings was substantial. This helped improve their teaching and motivated and engaged students. The "Creative Classrooms" program improved teaching and student happiness. Changes in teachers' pedagogical paradigms promoted emotional classrooms and improved student-parent communication. These findings emphasize the need for contextualized and ongoing pedagogical support to improve education.

However, López-Martínez & Gómez-Torres (2024) aimed to examine, from a gender perspective, how satisfied university students were with their virtual teaching experiences. A total of 283 undergraduates from the University of Seville's School of Educational Sciences made up the sample. Data was gathered using a mix of qualitative and quantitative methods, utilizing tools like interviews and inventories. Using the Kruskal-Wallis test, it was shown that there were statistically significant variations in satisfaction levels between the sexes, with women reporting significantly greater levels of satisfaction. Although students were generally pleased with the virtual platform, the key conclusion shows that there is a need for growth to make everyone happy.

Teaching practices are defined by Chavarría (2016) using words like pedagogical, teaching, educational, and didactic. Despite their varying definitions, these terms are frequently used synonymously. Teaching, according to Laspina-Olmedo & Montero (2023), is a collection of habits that can be passed on from one teacher to another. These habits serve as the basis for new practices

and representations, and they can change to meet the needs of their students without requiring them to be purposeful or have complete control over the processes involved. For teaching to be an ongoing process, it is necessary to start with both a general and specific goal concerning the learner. The approach reflects an evolutionary development, and these activities enable continual reflection through many types of evaluation, all built on top of that foundation (Holmos-Flores et al., 2023). When these components are in harmony, it becomes possible to generate practices that can institute change, offering a coherent institutional proposition for the process of teaching and learning.

The educational process, pedagogical discourse, and teacher reflection on their practices are the pillars upon which pedagogical practices rest (Caballero & Ocampo, 2018). Pedagogical practice has progressed from an emphasis on knowledge acquisition to one that takes into account students' and instructors' needs, talents, and interests via reflective practice. Through pedagogical reflection, we may examine the following: the content that ought to be taught, how it is taught, the knowledge that students acquire, the practice's merits and shortcomings, the applicability of the tactics employed, and the interests and requirements of the setting in which the practice is carried out. To observe and enhance educational practice, this introspection is crucial.

Hernández (2015) adds that by viewing the student as the central figure in the educational process, the techniques employed by teachers and students alike have been examined. A teacher's pedagogical choices have an impact on their pupils' ability to learn, and each student has their unique learning style. Teaching takes place in complex, dynamic, and dialectical situations with goals that include passing on and preserving a society's cultural values, fostering societal changes, and aiding in professional and personal development (Montes de Oca et al., 2023). Both the educational system and its social and cultural environments are affected by and contribute to the challenges that education seeks to solve. As they encounter unique challenges in their work with students in a variety of classroom settings, teachers should regularly assess their pedagogical practices, seek out new information, and adapt their methods accordingly. According to Urrutia (2021), a teacher's practices are their habits of mind and actions about their pedagogical methods, which are frequently employed unconsciously. Both the educator's perspective and the growth of their pedagogical activity, as well as their connections to other members of the educational community, inform the establishment of these methodological practices.

According to Díaz and Pérez (2023), customer satisfaction may be described as the impression a client has of a service provider after comparing their expectations with what they received. This mindset develops as an emotional response to meeting the customer's needs and exceeding their expectations. In addition, as Velasco (2014) explains, customer satisfaction is defined as the extent to which a need, want, or preference has been fulfilled. Meeting student expectations has become a major challenge for educational institutions. Their success increasingly depends on their ability to satisfy the needs of their primary clients—the students—and to prepare them effectively for the workforce. Nobario (2018) emphasizes satisfaction as a feeling of well-being that arises when an unmet need, whether business-related or psychological, is addressed. This well-being, which may be conscious or unconscious, generates a psychological drive that motivates behavior toward the fulfillment of needs (Robbins & Judge, 2013).

When needs are met, satisfaction is achieved; when they are not, dissatisfaction results. In evaluating the quality of education, it is essential to consider student satisfaction, according to Sarmiento (2019). The satisfaction level of students involved in the educational process is one of the most significant indicators of educational quality, reflecting their perception of the effectiveness and overall quality of the instruction they received.

According to Saldaña-Cerván (2023), the level of student satisfaction in virtual classrooms is determined by how well students feel their educational requirements and expectations have been addressed by the online learning platform. This idea covers a lot of ground, including things like the amount and quality of instructional materials, the ease of interacting with instructors and classmates, the accessibility of technological resources, and the availability of technical assistance. From the student's point of view, the educational experience is considered successful and pleasurable when their satisfaction is high (Sanjuán-Gómez et al., 2023). Utilizing surveys and questionnaires that assess many distinct categories allows for the measurement of student satisfaction in online classes. Study material clarity and relevance, online platform accessibility and usability, instructor communication effectiveness, opportunities to participate in interactive activities, and perception of technical assistance are all included in these categories. Students usually indicate how much they agree with comments on their online learning experience using a Likert scale. According to Fornell & Larcker (1981), this assessment yields numerical data that may be used to pinpoint problem areas and support instructional strategies that lead to higher levels of student satisfaction.

"Teaching practices" in online classrooms are the actual procedures that educators follow to help their students learn in a digital setting. Content design and organization, digital technology integration, interactive material creation, and the promotion of an inclusive and collaborative learning environment are all components of this technique. To maximize student engagement and academic achievement, teaching practices in virtual classrooms essentially involve transferring traditional pedagogical strategies to the digital environment (Ponce-Vera et al., 2023). Tools like surveys and interviews may be used to examine several important features of online classroom instruction. The course materials should be well-organized and easy to understand, the teacher should be able to communicate and provide feedback effectively, technological tools should be used to help students learn, and the teacher should be able to encourage students to participate and work together. Using Likert scales, we can quantify the effect of instructional practice on online learning by collecting responses. The effectiveness of virtual classroom pedagogy may be better understood with the use of this assessment (Garrison & Vaughan, 2008).

3. Methodology

The goal of applied research is to enhance and resolve issues related to real-world applications. Although pure research focuses on broad concepts and principles, it still provides valuable data (Hernández-Sampieri & Mendoza, 2018). Nevertheless, in non-experimental settings, independent variables cannot be manipulated. Researchers observe the natural world without interference. This design is useful in cases where controlled experiments are either impractical or

ethically problematic. In cross-sectional research, data is collected at a single point in time. Researchers take a snapshot of the relevant variables to describe phenomena and identify relationships among them. However, studies that explore correlations between variables do not necessarily establish a cause-and-effect relationship. Identifying trends and patterns in the data is a preliminary step before conducting experimental studies to investigate the origins of these correlations (Hernández-Sampieri & Mendoza, 2018).

The sample population consisted of 701 students from all academic departments who were registered for the Fall 2022–2023 semester. The final sample comprised 365 first-semester students from 2022, with their distribution determined proportionally based on enrollment in each professional school. The primary focus of the survey was to assess university students' satisfaction and the effectiveness of online education. Data collection involved two scales. The first scale measured students' satisfaction with virtual environments (12 items; responses ranged from 1 = strongly disagree to 5 = strongly agree on a Likert scale). The second scale assessed instructors' use of virtual environments (43 items across 7 dimensions; also using a 1 to 5 Likert scale).

Two instruments were used for validation: one measuring student satisfaction and the other measuring instructional practices in virtual settings. Their theoretical structures were confirmed using confirmatory factor analysis. Subsequently, a structural equation model (SEM) was estimated to represent the underlying relationship between the two variables. We computed the structural coefficient of the SEM to test the hypothesis, applying a t-test to evaluate the statistical significance of the structural relationship, and using the sign of the structural coefficient to determine the direction of the association. This was integrated into the final model.

4. Results

The result shows that 53% of the students surveyed are male, and 47% are female. Sixty-two percent are between 21 and 25 years old, while only 5% are between 26 and 30 years old. Fifteen percent of the students come from the Faculty of Social Sciences, Education, and Communication, while 6% come from the Faculty of Mining Engineering, Geology, and Metallurgy. Furthermore, the teaching practice item in virtual classrooms with the highest average value is item P24 (Mean = 3.87), while the item with the lowest average is item P26 (Mean = 3.41). Likewise, the majority of students agreed with the statements in the items, while a minority disagreed. Regarding student satisfaction in virtual classrooms, the item with the highest average is S3 (Mean = 3.15), whereas the item with the lowest average is S6 (Mean = 2.98). Similarly, most students agreed with the statements, followed by those who expressed indifference.

To confirm the measurement model of teaching practices in virtual classrooms, an exploratory factor analysis (EFA) was first conducted to identify the underlying factors. The principal components estimation method with Promax rotation and Kaiser normalization was applied. Figure 1 shows that the standardized factor loadings (coefficients) of the measurement model are positive

and statistically significant. The highest factor loading was observed in item P9 (0.827), indicating a strong positive relationship between item P9 and the latent factor (F5). This means that item P9 is a good indicator of the latent factor F5, as a substantial proportion of its variability is explained by F5. Specifically, the variance explained by the latent factor is given by the squared factor loading ($0.827^2 = 0.684$), which indicates that approximately 68.4% of the variability in responses to item P9 is due to the latent factor F5. The lowest factor loading was observed in item P43 (0.577), indicating a moderate positive relationship with the latent factor F1. This suggests that item P43 is a weaker indicator of the latent factor F1, as a smaller proportion of its variability is explained by it. The variance explained by the latent factor is represented by the squared factor loading ($0.577^2 = 0.333$), which shows that approximately 33.3% of the variability in responses to item P43 is attributable to latent factor F1.

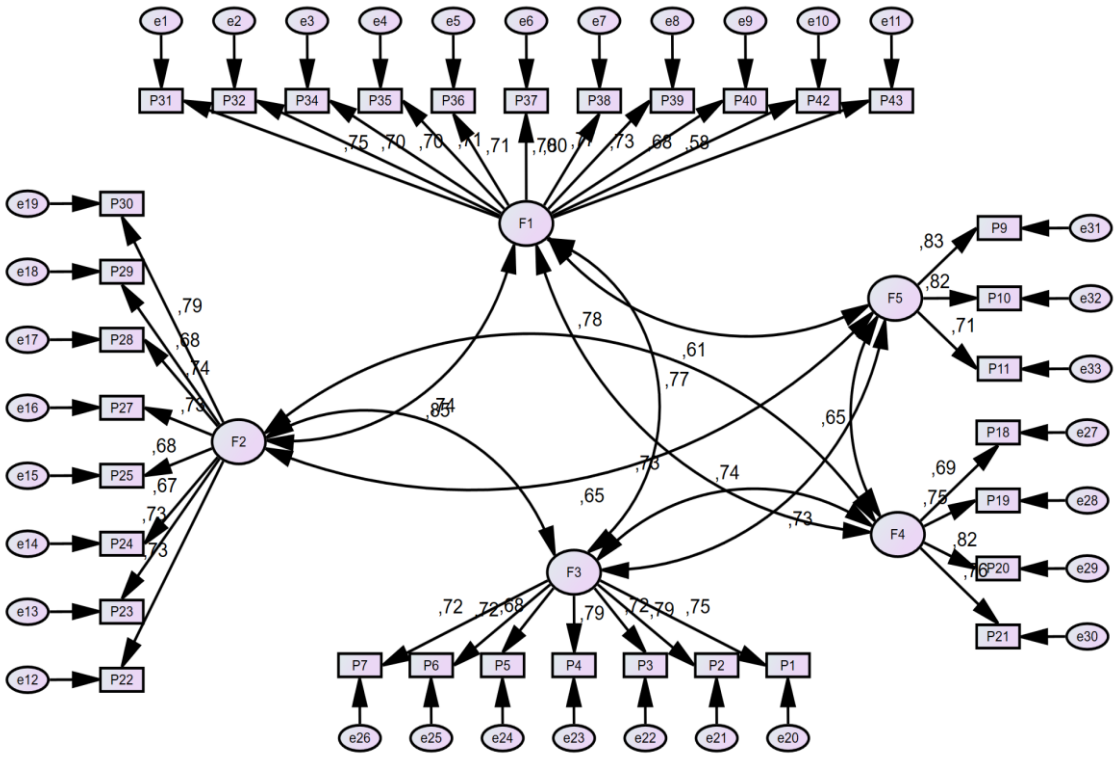

Figure 1: Measurement model of teaching practices in virtual classrooms

From Table 1, it is observed that the fit indices of the teaching practice measurement model indicate that the model presents an acceptable fit in several key aspects, though not in all. The chi-square value is significant (p-value = 0.000), suggesting a poor fit; however, since this measure is highly sensitive to sample size, it is essential to consider additional fit indices. The χ^2/df ratio is 1.957, meeting the criterion of being less than 3. The Comparative Fit Index (CFI) is 0.934, and the Tucker-Lewis Index (TLI) is 0.928—both exceeding the acceptable threshold of 0.90, indicating a good fit. The Normed Fit Index (NFI)

is 0.874, slightly below the 0.90 benchmark, suggesting room for improvement. The Root Mean Square Error of Approximation (RMSEA) is 0.051, within the acceptable range (≤ 0.08), and the Root Mean Square Residual (RMR) is 0.031, also within the acceptable limit (≤ 0.08). Overall, the model demonstrates adequate fit across most indices, although some areas may benefit from further refinement.

Table 1: Fit indices of the teaching practice measurement model

Name	Fitting Measurement	Value	Acceptable limit *	Result
Chi-square	*p*-valor	0.000	> 0.05	Does not comply
Chi-square/df	χ^2/df	1.957	< 3	comply
Comparative Fit Index	CFI	0.934	≥ 0.90	comply
Normed fit index	NFI	0.874	≥ 0.90	Does not comply
Tucker-Lewis index	TLI	0.928	≥ 0.90	comply
Root mean square error of approximation	RMSEA	0.051	≤ 0.08	comply
Square root means square error	RMR	0.031	≤ 0.08	comply

To confirm the measurement model of student satisfaction in virtual classrooms, an exploratory factor analysis (EFA) was first conducted to identify the underlying factors. The principal components estimation method with Promax rotation and Kaiser normalization was employed. Table 2 presents the distribution of the 12 items into two underlying factors:

- SE1 = Positive perception of virtual learning (F1 = η_1): S1, S2, S3, S4, S5, S6, S7, S8, and S9
- SE2 = Negative perception of virtual learning (F2 = η_2): S10, S11, and S12

Table 2: Underlying factors of student satisfaction in virtual classrooms

Item	Underlying factor		Communality
	1	2	
S1	0.864		0.736
S2	0.891		0.778
S3	0.898		0.787
S4	0.915		0.824
S5	0.908		0.813
S6	0.870		0.778
S7	0.844		0.733
S8	0.800		0.663
S9	0.815		0.694
S10		0.853	0.711
S11		0.872	0.753
S12		0.816	0.708

For the positive perception of virtual learning, the factor loadings for items S1 to S9 range between 0.800 and 0.915. This indicates a strong relationship between these items and the latent factor representing positive perceptions. Factor loadings greater than 0.70 are generally considered indicative of a strong factor structure. Furthermore, the communalities for items S1 to S9 range from 0.663 to 0.824, meaning that between 66.3% and 82.4% of the variability in these items is explained by the underlying factor η_1. This suggests that these items are strong indicators of the positive perception construct. For the negative perception of virtual learning, the factor loadings for items S10 to S12 are 0.853, 0.872, and 0.816, respectively—again exceeding the 0.70 threshold and demonstrating strong relationships with the latent factor η_2. The communalities for items S10 to S12 are 0.711, 0.753, and 0.708, respectively. These values indicate that between 70.8% and 75.3% of the variability in these items is explained by the negative perception factor, confirming that these items are robust indicators of this construct.

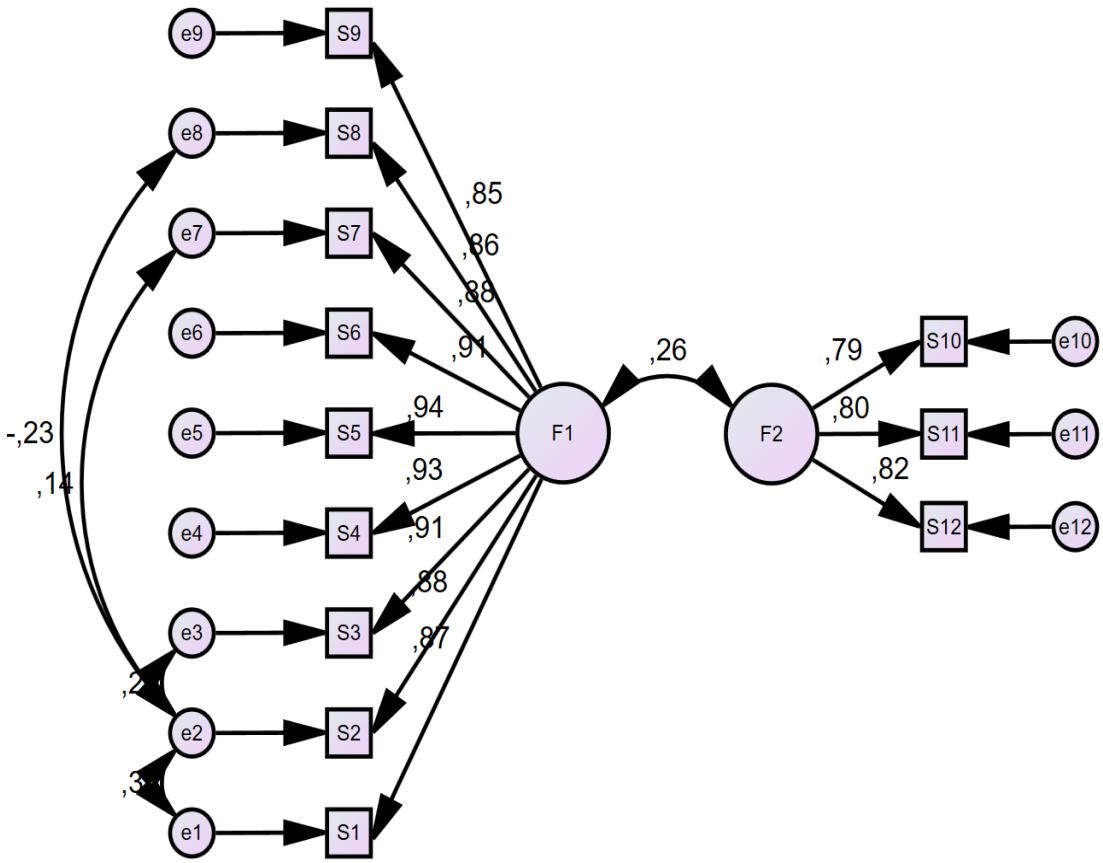

Figure 2: Student satisfaction measurement model

From Figure 2, it is observed that the standardized weights (coefficients) of the measurement model of student satisfaction in virtual classrooms are positive and significant. The highest factor loading is observed for item S5 (0.935), indicating a strong positive relationship between item S5 and the latent factor (F1). This means that item S5 is a strong indicator of latent factor F1, as a large proportion of its variability is explained by this factor. Specifically, the variance explained by latent factor F1 in item S5 is represented by the squared factor loading ($0.935^2 = 0.874$), indicating that approximately 87.4% of the variability

in responses to item S5 is due to latent factor F1. The lowest factor loading is found in item S10 (0.785), indicating a moderate positive relationship with the latent factor F2. Despite being the lowest, this still reflects a strong indicator of latent factor F2, as a significant portion of its variability is explained by the factor. The variance explained is represented by the squared factor loading ($0.785^2 = 0.616$), meaning that approximately 61.6% of the variability in responses to item S10 is attributable to latent factor F2. Furthermore, the significant positive covariance between factors F1 (Positive perception of virtual learning) and F2 (Negative perception of virtual learning) suggests a moderate relationship between these two dimensions. Although conceptually distinct, students' positive and negative perceptions of virtual learning are interrelated and can jointly influence their overall evaluation of the virtual learning experience. Additionally, the significant covariances observed between the error terms of certain items suggest the presence of shared variance not fully captured by the latent constructs. These shared relationships may be due to unmeasured latent variables or common characteristics among the items.

From Table 3, it is observed that the fit indices of the student satisfaction measurement model indicate adequate fit across several key measures, though some aspects require improvement. The chi-square statistic has a significant p-value (0.001), indicating poor fit; however, due to the sensitivity of this measure to sample size, alternative fit indices are considered more reliable. The χ^2/df ratio is 1.795, which meets the criterion of being less than 3, indicating an acceptable fit. The Comparative Fit Index (CFI) is 0.933 and the Tucker-Lewis Index (TLI) is 0.910, both exceeding the minimum threshold of 0.90, supporting good model fit. However, the Normed Fit Index (NFI) is 0.865, slightly below the acceptable cutoff of 0.90, pointing to a potential area for model refinement. The Root Mean Square Error of Approximation (RMSEA) is 0.047, which falls within the acceptable range (≤ 0.08), indicating a good fit. In contrast, the Root Mean Square Residual (RMR) is 0.102, exceeding the recommended upper limit of 0.08, indicating a specific aspect of poor model fit. Overall, although the model demonstrates an acceptable fit on most indices, certain measures—particularly NFI and RMR—highlight areas that could benefit from further adjustments to enhance model quality.

Table 3: Fit indices of the student satisfaction measurement model

Name	Fitting Measurement	Value	Acceptable limit *	Result
Chi-square	*p*-valor	0.001	> 0.05	Does not comply
Chi-square/df	χ^2/df	1.795	< 3	comply
Comparative Fit Index	CFI	0.933	≥ 0.90	comply
Normed fit index	NFI	0.865	≥ 0.90	Does not comply
Tucker-Lewis index	TLI	0.910	≥ 0.90	comply
Root mean square error of approximation	RMSEA	0.047	≤ 0.08	comply
Square root means square error	RMR	0.102	≤ 0.08	Does not comply

The structural relationship between teaching practices (η_1) and student satisfaction (η_2) can be represented by the following equation:

$$\boldsymbol{\eta_2 = \beta_{21} \times \eta_1 + \zeta}$$

Where: β_{21} is the structural coefficient that measures the relationship between teaching practices and student satisfaction; ζ is the error term of the structural model.

A significant negative relationship exists between the negative perception of virtual learning and the applicability of learning resources, with a standardized coefficient of –0.067. This indicates that more negative perceptions are associated with lower perceived usefulness of resources, although the effect size is small.

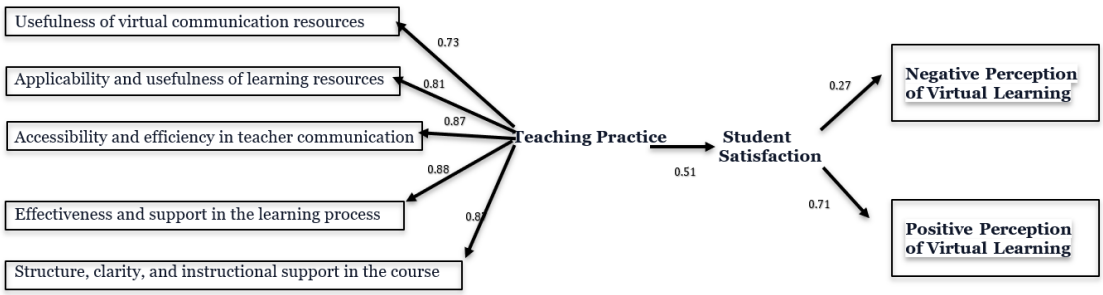

Figure 3. Structural equation model between teaching practices and student satisfaction

This figure illustrates the hypothesized structural path between the latent variable Teaching Practices (F1) and Student Satisfaction (F2). The model incorporates standardized path coefficients that quantify the strength and direction of the relationships between latent constructs and their observed indicators.

From Table 4, the following observations can be made. First, there is a significant and positive relationship between teaching practices (F1) and student satisfaction (F2). The standardized coefficient of 0.508 indicates a moderately strong and statistically significant relationship, suggesting that approximately 51% of the variance in student satisfaction is explained by teaching practices. The dimension "Structure, clarity, and teaching support in the course" shows a very strong relationship with teaching practices, with a standardized loading of 0.869, making it a key indicator of factor F1. "Effectiveness and support in the learning process" also demonstrates a strong and significant relationship with teaching practices (0.876), identifying it as a highly robust indicator of F1. "Accessibility and efficiency in teacher communication" has a strong loading of 0.868, reinforcing its role as a critical indicator of F1. "Applicability and usefulness of learning resources" presents a strong relationship with teaching practices (0.813), confirming its significance, though its contribution is slightly lower than the previous indicators. "Usefulness of virtual communication resources" is the weakest among the F1 indicators, with a standardized coefficient of 0.733, yet it remains a relevant contributor.

Regarding student satisfaction (F2), the "Positive perception of virtual learning" dimension has a strong relationship (0.715), making it a solid indicator

of F2. The "Negative perception of virtual learning" dimension, while significant, shows a weaker relationship with student satisfaction (0.270), suggesting that negative perceptions are less impactful on overall satisfaction compared to positive perceptions. The significant negative relationship between the negative perception of virtual learning and the applicability of learning resources indicates that a negative perception of virtual learning is associated with lower applicability and perceived usefulness of learning resources. Although this relationship is significant, its magnitude is small, with a standardized coefficient of -0.067, suggesting a limited impact.

Table 4: Weights of the structural equation model between teaching practices and student satisfaction

Relation			Weights		S.E.	C.R.	P-value
			Estimate	Standardized			
F2	←	F1	0.700	0.508	0.105	6.651	***
PD1	←	F1	1.000	0.869			
PD2	←	F1	1.040	0.876	0.060	17.353	***
PD3	←	F1	1.028	0.868	0.065	15.714	***
PD4	←	F1	1.062	0.813	0.070	15.166	***
PD5	←	F1	1.000	0.733	0.077	12.956	***
SE1	←	F2	1.000	0.715			
SE2	←	F2	0.355	0.270	0.152	2.330	0,020
PD4	←	SE2	-0.048	-0.067	0.021	-2.312	0.021

F1 = Teaching practices, F2 = Student satisfaction

From Table 5, it is observed that the fit indices of the structural equation model between teaching practices and student satisfaction indicate a generally adequate fit to the observed data. The chi-square statistic has a p-value of 0.095, which is greater than the standard threshold of 0.05, suggesting a good model fit. The χ^2/df ratio is 1.561, well below the cutoff of 3, further supporting an acceptable fit. The Comparative Fit Index (CFI) is 0.952, exceeding the acceptable limit of 0.90 and indicating an excellent fit. Although the Normed Fit Index (NFI) is 0.884, slightly below the 0.90 benchmark, other fit indices yield strong results. The Tucker-Lewis Index (TLI) is 0.916, the Root Mean Square Error of Approximation (RMSEA) is 0.039, and the Root Mean Square Residual (RMR) is 0.022—all within acceptable ranges. Taken together, these results suggest that the structural model demonstrates a good overall fit, with only minor adjustments potentially needed to improve the NFI.

Table 5: Structural equation model fit measures

Name	Fitting Measurement	Value	Acceptable limit *	Result
Chi-square	*p*-valor	0,095	> 0,05	comply
Chi-square/df	χ^2/df	1,561	< 3	comply
Comparative Fit Index	CFI	0,952	≥ 0,90	comply

Normed fit index	NFI	0,884	≥ 0,90	Does not comply
Tucker-Lewis index	TLI	0,916	≥ 0,90	comply
Root mean square error of approximation	RMSEA	0,039	≤ 0,08	comply
Square root means square error	RMR	0,022	≤ 0,08	comply

5. Discussion

The findings reveal an encouraging pattern in how students perceive the effectiveness of instruction in online courses. High average scores in key areas, such as teacher accessibility and effective communication, reflect this perception. These results align with those of Pasquali et al. (2019), who highlighted the importance of poly-teaching and the use of digital technology in distance education to enhance instructional quality. Similarly, as noted by Morales-Saavedra (2014), the findings emphasize the importance of time management and familiarity with online platforms. The results also support Durán et al. (2015), whose work underscores the effectiveness of well-designed pedagogical practices in online environments. In particular, high scores on items related to teacher contact and support—such as accessibility and the value of online discussion forums—echo the principles proposed by Chickering and Gamson (1987) on the importance of instructor-student interaction. These results reinforce the critical role of accessible and effective communication in successful online teaching.

There is also a promising trend toward student satisfaction in online courses, although there remains room for improvement. Among the evaluated items, the one measuring satisfaction with the virtual study option received the highest score, while the item comparing course quality to in-person classes received the lowest. This suggests that although skepticism persists regarding the relative effectiveness of virtual learning, students are generally embracing this modality. These results are consistent with De Melo-Pereira et al. (2015), who found that learners are more likely to continue using e-learning platforms when they are satisfied with their experience. At the same time, the challenges identified by Angulo et al. (2022)—particularly concerning learning assessment and the use of technical resources—remain relevant. While students report general satisfaction, there is a clear need to enhance the quality and evaluation processes of virtual courses.

The structural equation model revealed a positive and statistically significant association between teaching practices and student satisfaction. The results indicate that improved teaching practices are linked to higher levels of student satisfaction. Structural coefficients confirm that effective communication, teacher accessibility, and appropriate use of technological tools significantly shape students' perceptions of their online learning experience. This finding aligns with Saravia-Campos (2023), who also identified a strong relationship between teaching effectiveness and student satisfaction. Similarly, Villanueva et al. (2021) emphasize that, despite existing challenges, effective academic management and the strategic use of methodological and technological tools can positively influence both learning and student happiness. The findings of this

study further support the idea that teaching quality has a significant impact on student satisfaction in virtual settings, highlighting the importance of sustained communication, accessible course materials, and optimized use of technology to uphold educational standards at UNASAM.

6. Conclusion

Using a structural equation model (SEM), the study found a positive and statistically significant correlation between teaching practices and the satisfaction of UNASAM's online students. The results support the premise that students' perceptions of virtual education quality are shaped by effective pedagogical methods and the accessibility of instructors. The teaching practice measurement model revealed that students highly value effective communication, teacher accessibility, and the usefulness of discussion forums. These findings, in line with the literature on effective teaching, underscore the need for innovative educational approaches that promote open and dynamic dialogue between educators and students.

Overall, students expressed satisfaction with their virtual classroom experience at UNASAM. However, there are areas in need of improvement, such as students' perceptions of course quality compared to face-to-face classes. While students report general satisfaction with virtual learning, the findings highlight the necessity of enhancing educational quality and assessment to increase satisfaction further. Finally, the structural equation model analysis confirmed that improved teaching practices contributes to higher student satisfaction. The obtained structural coefficients demonstrate that effective communication, instructor accessibility, and the proper use of technology have a significant impact on student perception. This underscores the ongoing need to strengthen teaching practices and technological infrastructure to ensure high-quality education in virtual learning environments.

References

Angulo, L. C., Martins, T. D., Dulanto, F. D., & Zavala, H. E. (2022). *Teacher performance in virtual classes and the academic satisfaction of students in the course "Historical Formation of Peru" in the Industrial Engineering program of a private university in Lima, during the 2021-II period* [Undergraduate thesis, Universidad Privada de Lima]. https://hdl.handle.net/20.500.12867/6210

Caballero, M., & Ocampo, J. (2018). *Teacher training, teaching practice, and reflective practice: A training challenge in higher education institutions*. Scielo. https://www.scielo.org.mx

Cabero-Almenara, J., & Palacios-Rodríguez, A. (2021). *Evaluation of virtual education: E-activities. RIED. Revista Iberoamericana de Educación a Distancia, 24*(2), 169–188. https://doi.org/10.5944/ried.24.2.28994

Chavarría, A. (2016). *The meaning of teaching practice, in the voice of its protagonists*. Redalyc. http://www.redalyc.org

Chickering, A. W., & Gamson, Z. F. (1987). Seven principles for good practice in undergraduate education. *AAHE Bulletin, 3*, 7. https://eric.ed.gov/?id=ed282491

De Melo-Pereira, M., Martins-Ramos, F., & Marreiro das Chagas, A. (2015). Satisfaction in e-learning and its impact on continued use. *Journal of Online Learning, 10*(2), 105–118. https://doi.org/10.1016/j.jol.2015.02.003

Díaz, M. Á., & Pérez, C. del C. (2023). *Satisfaction level of marketing strategy students at Uniagustiniana-Colombia*. *Revista de Ciencias Sociales, 29*(2), 387–405. https://doi.org/10.31876/rcs.v29i2.39983

Díaz-Camacho, R., Rivera, J., Encalada, I., & Romani, Ú. (2022). *Student satisfaction in virtual education: An international systematic review*. *Revista Chakiñan de Ciencias Sociales y Humanidades*, (16), 177–193. https://doi.org/10.37135/chk.002.16.11

Durán, M., Estay-Niculcar, C., & Álvarez, M. (2015). Best practices in virtual education. *Educational Research Journal, 49*(4), 567–580. https://doi.org/10.1017/edr.2015.0049

Fornell, C., & Larcker, D. F. (1981). Evaluating structural equation models with unobservable variables and measurement error. *Journal of Marketing Research, 18*(1), 39–50. https://doi.org/10.2307/3151312

Galarce-Miranda, C., Gormaz-Lobos, L., & Hortsch, C. (2022). Integration of ICT in university education post-COVID-19. *Journal of Educational Technology Systems, 51*(2), 125–141. https://doi.org/10.2190/ET.51.2.a

Gálvez-Sobral, J. A., Argueta, B., Johnson, J., & Zelada, M. (2014). *The satisfaction of learning to teach: Teachers' opinions after completing the "Creative Classrooms" training program*. Centro de Investigaciones Educativas, Instituto de Investigaciones, Universidad del Valle de Guatemala. http://www.universidadvalle.edu.gt

García-Aretio, L. (2021). Reflections on distance education during the pandemic. *International Review of Research in Open and Distributed Learning, 22*(2), 1–9. https://doi.org/10.19173/irrodl.v22i2.5294

Garrison, D. R., & Vaughan, N. D. (2008). *Blended learning in higher education: Framework, principles, and guidelines*. Jossey-Bass. https://doi.org/10.1002/9781118269558

Gómez-Arteta, I., & Escobar-Mamani, F. (2021). *Virtual education in times of pandemic: Increasing social inequality in Peru*. *Revista Chakiñan de Ciencias Sociales y Humanidades*, (15), 152–165. https://doi.org/10.37135/chk.002.15.10

Hernández, P. (2015). *Discussion of results – Teaching practice and its relationship with the professional profile*. 1Library. https://1library.co

Hernández-Sampieri, R., & Mendoza, C. P. (2018). *Research methodology: Quantitative, qualitative, and mixed routes*. McGraw-Hill Interamericana.

Holmos-Flores, E., Atencio-Gonzáles, R. E., Espinoza-Moreno, T. M., & Abarca-Arias, Y. M. (2023). *Alternative and traditional assessment in the context of university education*. Revista Arbitrada Interdisciplinaria Koinonía, 8(16), 220–237. https://doi.org/10.35381/r.k.v8i16.2546

Laspina-Olmedo, T., & Montero, D. (2023). *Inclusive competence in teaching practice: Bibliographic analysis and categorization proposal*. ALTERIDAD. Revista de Educación, 18(2), 177–186. https://doi.org/10.17163/alt.v18n2.2023.02

Montes de Oca, H., Bazán, A., & Tirado, J. (2023). *Learning strategies and teaching performance in academic satisfaction among university students*

in Lima. Propósitos y Representaciones, 11(2), e1792. https://doi.org/10.20511/pyr2023.v11n2.1792

Morales-Saavedra, G. (2014). *Challenges and improvements in online education for educators*. Journal of Educational Technology, 45(2), 123–135. https://doi.org/10.1016/j.jest.2014.02.001

Nobario, S. (2018). *Job and personal satisfaction: A review from the perspective of organizational behavior*. Revista de Psicología y Comportamiento. https://revistas.unal.edu.co/index.php/novum/article/view/70586

Ortega, P., Rodríguez, L., & Mateos, P. (2021). *Methodological adaptations during the COVID-19 pandemic*. Higher Education Research & Development, 40(3), 442–456. https://doi.org/10.1080/07294360.2020.1857048

Pasquali, L., Teodoro-Rodrigues, D., & Lazzarotti-Filho, A. (2019). *The work of physical education teachers in distance education*. Revista Brasileira de Educação Física e Esporte, 33(1), 85–94. https://doi.org/10.1590/1807-5509201900010085

Pedró, F. (2020). *Educational transformations during COVID-19: Documentation and future strategies*. Journal of Educational Change, 21(2), 231–247. https://doi.org/10.1007/s10833-020-09367-8

Ponce-Vera, F. F., Zambrano Acosta, J. M., & de la Peña Consuegra, G. (2023). *The development of virtual classrooms in university contexts: Analysis of perceptions from the perspective of teachers*. Revista Cubana de Educación Superior, 42(2), 43–58. https://revistas.uh.cu/rces/article/view/6902

Rivera, H. S., Otiniano, N. M., & Goicochea, E. del S. (2023). *Didactic strategies in university virtual education: A systematic review*. Edutec. Electronic Journal of Educational Technology, (83), 120–134. https://doi.org/10.21556/edutec.2023.83.2683

Robbins, S. P., & Judge, T. A. (2013). *Organizational behavior* (15th ed.). Pearson Educación. https://apps.utel.edu.mx/recursos/files/r161r/w24661w/RobbinsComportamientoOrganizacional_cap3.pdf

Saldaña-Cerván, E. J. (2023). *Implementation of a virtual classroom to improve the satisfaction of secondary school students in a Peruvian educational institution*. Revista Científica de Sistemas e Informática, 3(1), e474. https://doi.org/10.51252/rcsi.v3i1.474

Sanjuán-Gómez, G., Del Castillo-Saiz, G. D., Rabell-Piera, O., & Gómez-Martínez, M. (2023). *Distance education in times of pandemic: Student satisfaction?* In Edumedholguin2023 (pp. 1–12). https://edumedholguin.sld.cu/index.php/edumedholguin23/2023/paper/view/396

Saravia-Campos, E. (2023). *Teacher performance and student satisfaction at the secondary level: I.E.E. Luis Fabio Xammar Jurado* [Master's thesis, Universidad Nacional José Faustino Sánchez Carrión]. UNJFSC Institutional Repository. https://repositorio.unjfsc.edu.pe/bitstream/handle/20.500.14067/3789/tesis%20ESTELA%20SARAVIA%20CAMPOSSSS.pdf?sequence=1&isAllowed=y

Sarmiento, P. (2019). *Student satisfaction as an indicator of educational quality*. Revista de Calidad Educativa.

Schleicher, A. (2020). *The impact of COVID-19 on education: Insights from Education at a Glance 2020*. OECD. https://www.oecd.org/education/the-impact-of-covid-19-on-education-insights-education-at-a-glance-2020.pdf

UNESCO. (2020). *Education in a post-COVID world: Nine ideas for public action*. https://en.unesco.org/news/education-post-covid-world-nine-ideas-public-action

Urrutia, R. (2021). *Reflection on teaching practice: Theory and practice in teacher training*. Scielo. https://www.scielo.org.mx

Velasco, J. (2014). *Customer satisfaction in higher education*. Editorial Académica Española.

Villanueva, H. J., Vega, P. G., Vásquez, C. Y., Morales, S., & Siccha, R. E. (2021). *Perception of teacher performance according to educational stakeholders during the pandemic*. Revista Espacios, 42(17). https://www.revistaespacios.com/a21v42n17/a21v42n17p04.pdf